PRIV. DE RIO SANTIAGO #30
COL. LA RAZA
SOLEDAD DE GRACIANO SANCHEZ
SAN LUIS POTOSI, C.P. 78433

L F Schmidt

L. F. SCHMIDT
LICENSE
No. 43409
STATE OF FLORIDA
PROFESSIONAL ENGINEER

Digitally signed by Lyndon F Schmidt
Date: 2023.07.11 09:27:09 -04'00'

This item has been digitally signed and sealed by **L. F. Schmidt, P.E.** on the date adjacent to the seal.

Printed copies of this document are not considered signed and sealed and the signature must be verified on any electronic copies.

THIS PRODUCT APPROVAL IS VALID ONLY FOR THE STATE OF FLORIDA

"N" SERIES COMMERCIAL STEEL DOOR w/ SIDELITES & TRANSOM

INSWING / OUTSWING

"IMPACT"

GENERAL NOTES

1. This product has been evaluated and is in compliance with the 8th Edition (2023) Florida Building Code (FBC) structural requirements excluding the "High Velocity Hurricane Zone" (HVHZ).

2. Product anchors shall be as listed and spaced as shown on details. Anchor embedment to base material shall be beyond wall dressing or stucco.

3. When used in areas requiring wind borne debris protection this product complies with Section 1609.1.2 of the FBC and does not require an impact resistant covering. This product meets missile level "D" and includes Wind Zone 4 as defined in ASTM E1996 and Section 1609.1.2.2 of the FBC.

4. Site conditions that deviate from the details of this drawing require further engineering analysis by a licensed engineer or registered architect.

5. The "N" door achieves a Class III stiffness classification per Section 8.2.2 of ANSI A250.13 (based on opaque door).

TABLE OF CONTENTS

SHEET #	DESCRIPTION
1	Typical elevations, design pressures, & general notes
2	Door panel sections 161 lock prep
3	Horizontal cross sections
4	Vertical cross sections
5	Vertical cross sections
6	Vertical cross sections
7	Anchoring details
8	Glazing detail & components
9	Components
10	Bill of materials & components

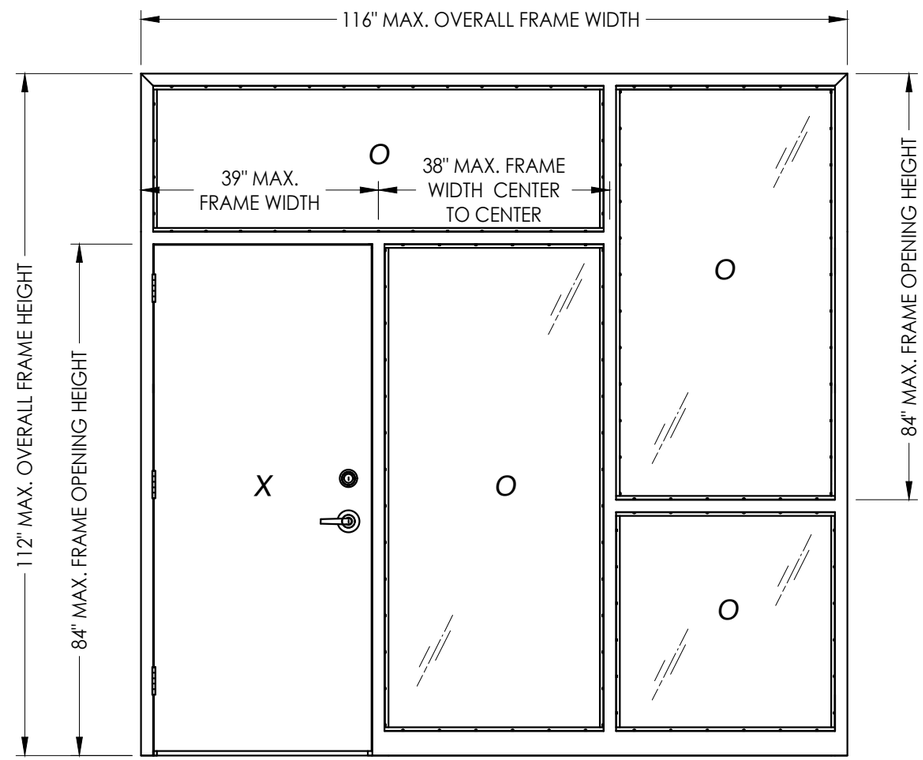

OVERALL FRAME DIMENSION	TRANSOM D.L.O. DIMENSION	SIDELITE (REC) D.L.O. DIMENSION	SIDELITE (SQU) D.L.O. DIMENSION	LOCK TYPE	GLASS TYPE	DESIGN PRESSURE (PSF)	
						POSITIVE	NEGATIVE
116" x 112"	72.75" x 22.75"	34.75" x 78.75"	34.75" x 34.75"	161 LATCH (SCHLAGE)	G1, G2	+55.0	-55.0
				161 LATCH & DEADBOLT (DESIGN HARDWARE)		+65.0	-65.0

Documents Prepared By:
Lyndon F. Schmidt
P.E. No. 43409

RW BUILDING CONSULTANTS, INC.
P.O. Box 230, Valrico, FL 33595
Phone No.: 813.659.9197
FBPE Registry No. 9813

PRODUCT: MMI "N" STEEL DOOR

PART OR ASSEMBLY: TYPICAL ELEVATIONS, DESIGN PRESSURES & GENERAL NOTES

REVISIONS

NO.	DATE	BY
4	7/11/23	LFS
3	7/30/20	DAC
2	7/18/17	LFS
1	10/14/16	JK

UPDATE TO 8TH ED. (2023) FBC
UPDATE TO 7TH ED. (2020) FBC
UPDATE TO 6TH ED. (2017) FBC
UPDATE TO 5TH ED. (2014) FBC

DATE: 11/3/08
SCALE: N.T.S.
DWG. BY: AL
CHK. BY: LFS
DRAWING NO.: FL-12186.8
SHEET 1 OF 10

© 2008 R.W. Building Consultants Inc.

Z:\2023 FBC Drawings\Metal Mfg Industries\FL-12186 R4\12186.1-8.dwg

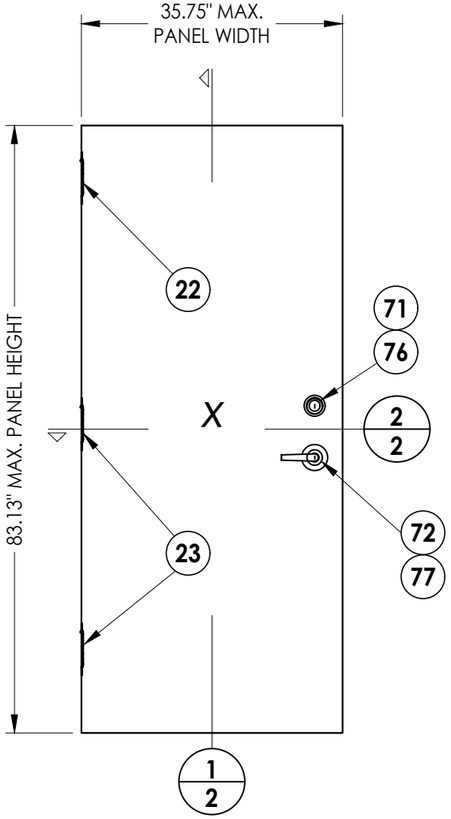

1 "N" OPAQUE STEEL DOOR PANEL

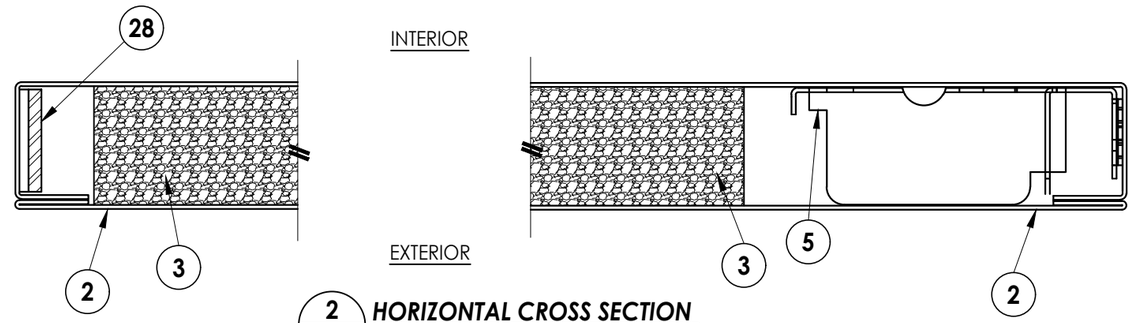

2/2 HORIZONTAL CROSS SECTION
Door panel

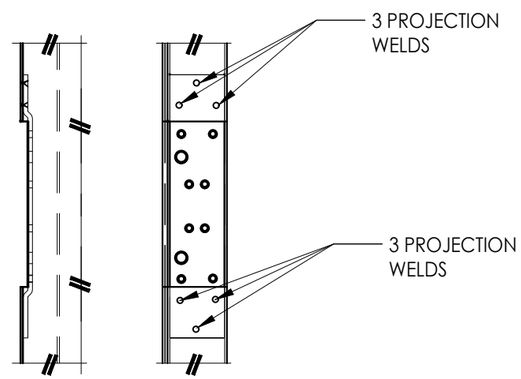

23 DOOR HINGE REINFORCEMENT

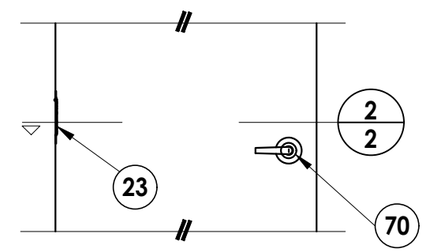

70 OPTIONAL LATCH ONLY

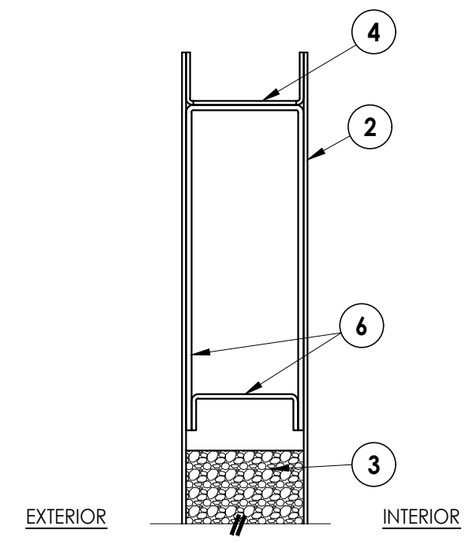

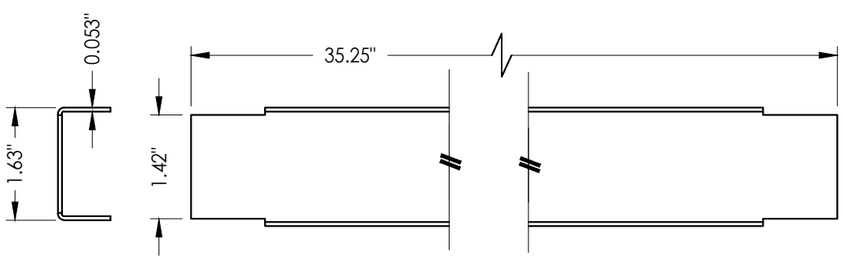

4 DOOR TOP & BOTTOM CLOSER

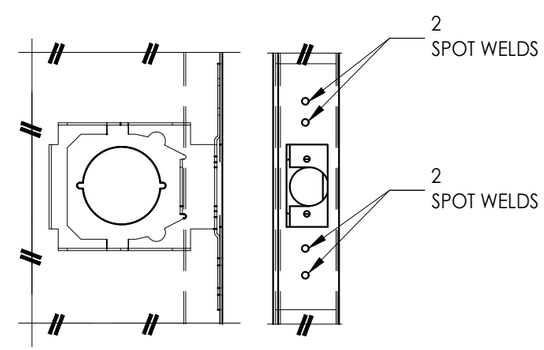

5 LOCK BOX REINFORCEMENT

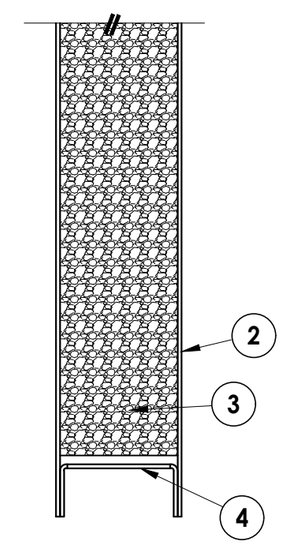

1/2 VERTICAL CROSS SECTION
Door panel

NOTE: ALL WELDING TO CONFORM w/ AMERICAN WELDING SOCIETY, ANSI/AWS AS PER FBC SECTION 2214.3.4.

Z:\2023 FBC Drawings\Metal Mfg Industries\FL-12186 R4\12186.1-8.dwg

Documents Prepared By:
Lyndon F. Schmidt
P.E. No. 43409
RW BUILDING CONSULTANTS, INC.
P.O. Box 230, Valrico, FL 33595
Phone No.: 813.659.9197
FBPE Registry No. 9813

PRODUCT: MMI "N" STEEL DOOR

PART OR ASSEMBLY: DOOR PANEL SECTIONS 161 LOCK PREP

NO.	DATE	REVISIONS	BY
4	7/11/23	UPDATE TO 8TH ED. (2023) FBC	LFS
3	7/30/20	UPDATE TO 7th ED. (2020) FBC	DAC
2	7/18/17	UPDATE TO 6TH ED. (2017) FBC	LFS
1	10/14/16	UPDATE TO 5TH ED. (2014) FBC	JK

DATE: 11/3/08
SCALE: N.T.S.
DWG. BY: AL
CHK. BY: LFS
DRAWING NO.: FL-12186.8
SHEET 2 OF 10

© 2008 R.W. Building Consultants Inc.

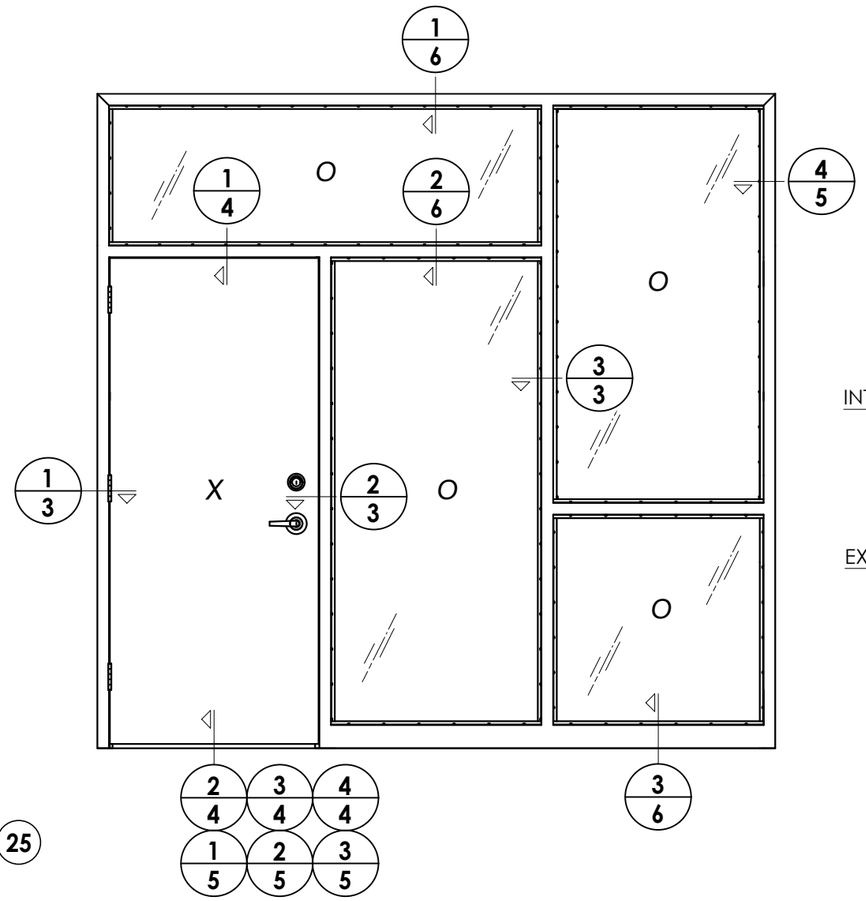

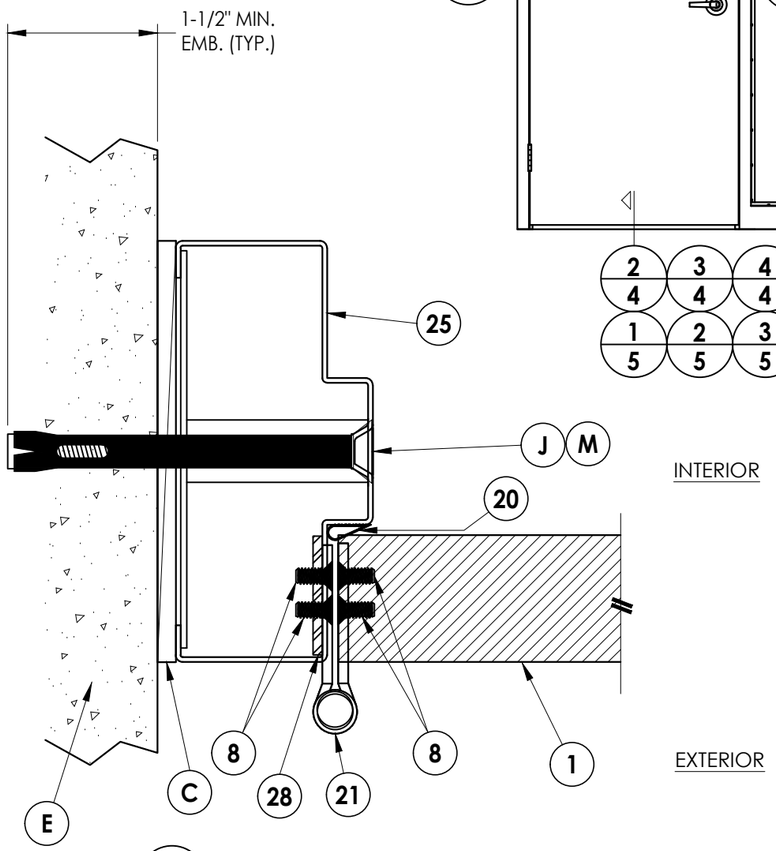

1/3 **HORIZONTAL CROSS SECTION**
Outswing shown
Inswing also approved

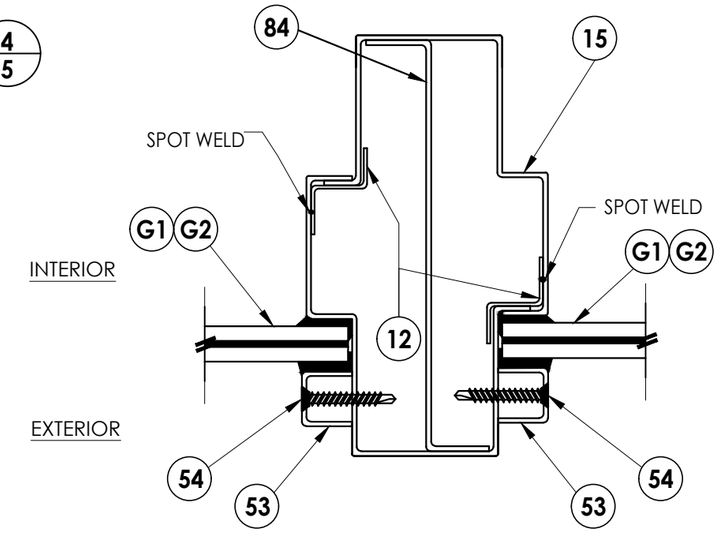

3/3 **HORIZONTAL CROSS SECTION**

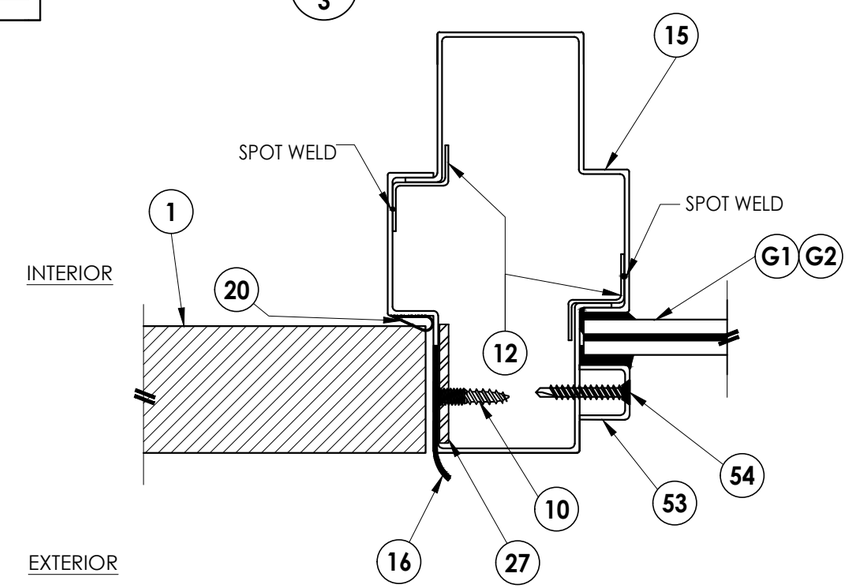

2/3 **HORIZONTAL CROSS SECTION**
Outswing shown
Inswing also approved

Documents Prepared By:
Lyndon F. Schmidt
P.E. No. 43409

RW BUILDING CONSULTANTS, INC.
P.O. Box 230, Valrico, FL 33595
Phone No.: 813.659.9197
FBPE Registry No. 9813

PRODUCT: MMI "N" STEEL DOOR

PART OR ASSEMBLY: HORIZONTAL CROSS SECTIONS

REVISIONS

NO.	DATE		BY
4	7/11/23	UPDATE TO 8TH ED. (2023) FBC	LFS
3	7/30/20	UPDATE TO 7TH ED. (2020) FBC	DAC
2	7/18/17	UPDATE TO 6TH ED. (2017) FBC	LFS
1	10/14/16	UPDATE TO 5TH ED. (2014) FBC	JK

DATE: 11/3/08
SCALE: N.T.S.
DWG. BY: AL
CHK. BY: LFS
DRAWING NO.: FL-12186.8
SHEET 3 OF 10

© 2008 R.W. Building Consultants Inc.

Z:\2023 FBC Drawings\Metal Mfg Industries\FL-12186 R4\12186.1-8.dwg

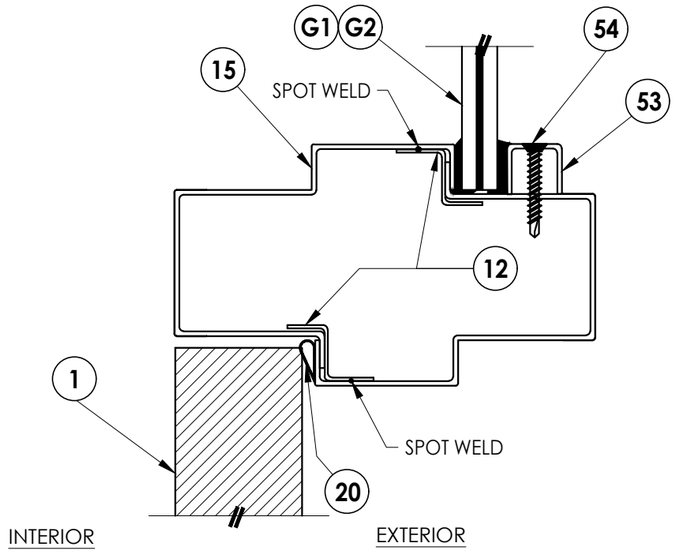

1/4 VERTICAL CROSS SECTION
Inswing configuration

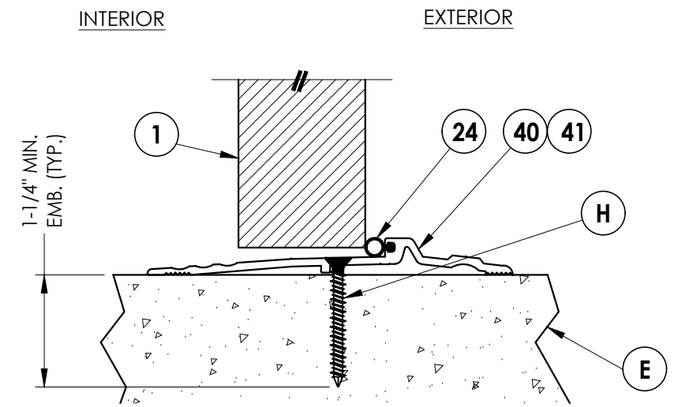

2/4 VERTICAL CROSS SECTION
Inswing configuration

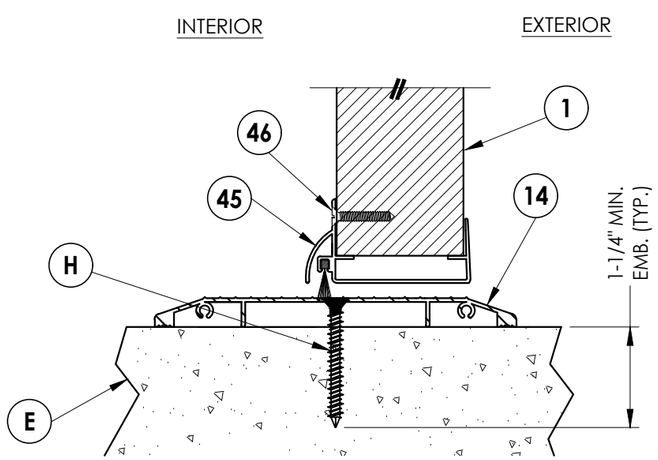

3/4 VERTICAL CROSS SECTION
Inswing configuration

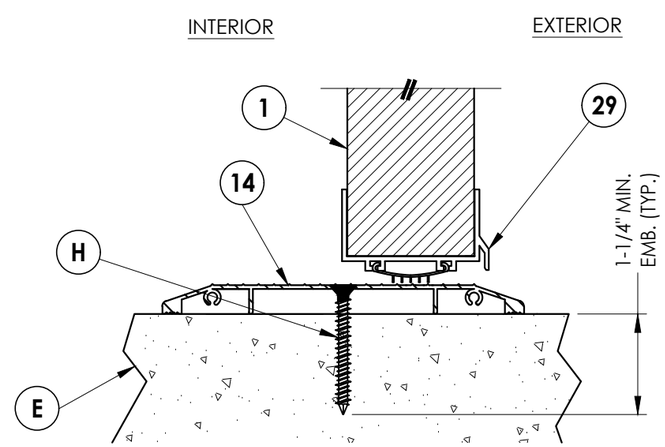

4/4 VERTICAL CROSS SECTION
Inswing configuration

Documents Prepared By:
Lyndon F. Schmidt
P.E. No. 43409

RW BUILDING CONSULTANTS, INC.
P.O. Box 230, Valrico, FL 33595
Phone No.: 813.659.9197
FBPE Registry No. 9813

PRODUCT: "N" OPAQUE STEEL DOOR MMI

PART OR ASSEMBLY: VERTICAL CROSS SECTIONS

REVISIONS

NO.	DATE		BY
4	7/11/23	UPDATE TO 8TH ED. (2023) FBC	LFS
3	7/30/20	UPDATE TO 7th ED. (2020) FBC	DAC
2	7/18/17	UPDATE TO 6TH ED. (2017) FBC	LFS
1	10/14/16	UPDATE TO 5TH ED. (2014) FBC	JK

DATE: 11/3/08
SCALE: N.T.S.
DWG. BY: AL
CHK. BY: LFS
DRAWING NO.: FL-12186.8
SHEET 4 OF 10

© 2008 R.W. BUILDING CONSULTANTS INC.

Z:\2023 FBC Drawings\Metal Mfg Industries\FL-12186 R4\12186.1-8.dwg

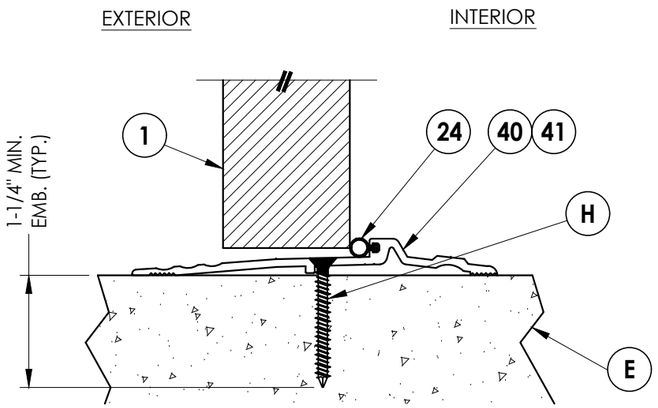

1/5 VERTICAL CROSS SECTION
Outswing configuration

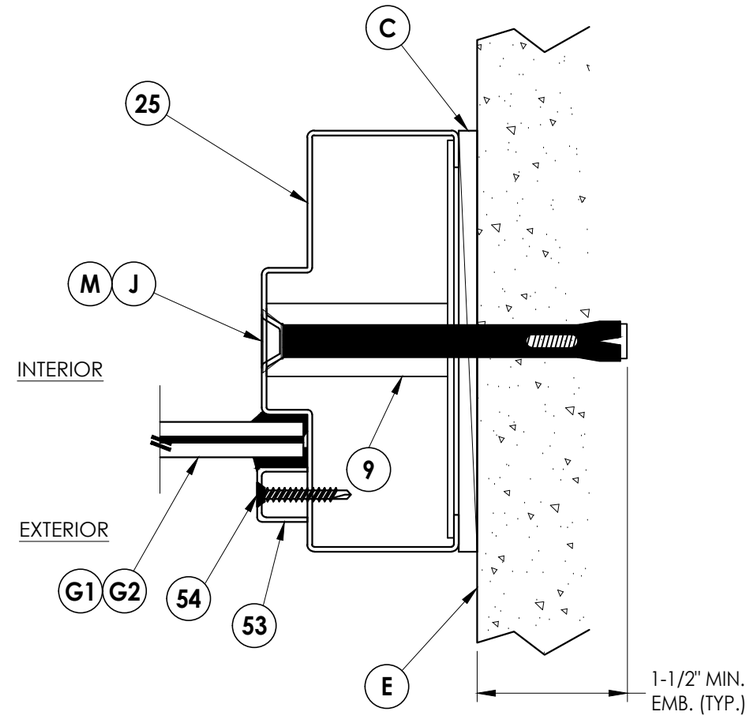

4/5 HORIZONTAL CROSS SECTION

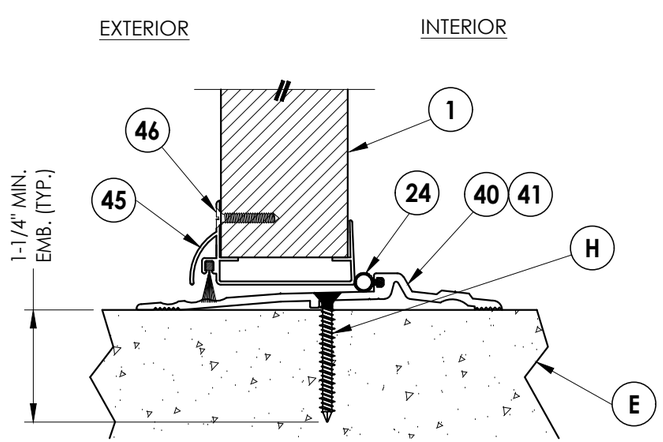

2/5 VERTICAL CROSS SECTION
Outswing configuration

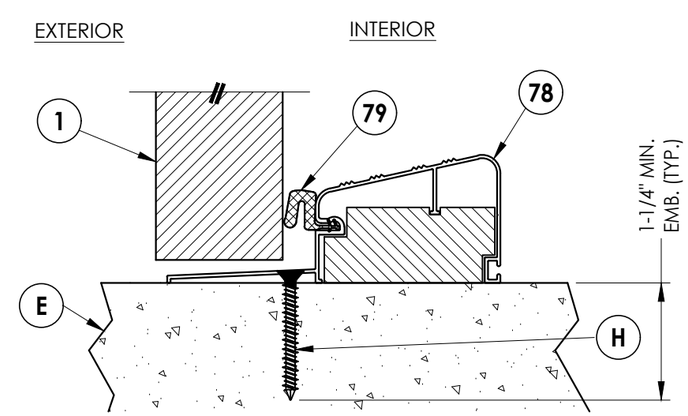

3/5 VERTICAL CROSS SECTION
Outswing configuration

Documents Prepared By:
Lyndon F. Schmidt
P.E. No. 43409

RW BUILDING CONSULTANTS, INC.
P.O. Box 230, Valrico, FL 33595
Phone No.: 813.659.9197
FBPE Registry No. 9813

PRODUCT: MMI
"N" OPAQUE STEEL DOOR
PART OR ASSEMBLY:
VERTICAL CROSS SECTIONS

NO.	DATE	REVISIONS	BY
4	7/11/23	UPDATE TO 8TH ED. (2023) FBC	LFS
3	7/30/20	UPDATE TO 7th ED. (2020) FBC	DAC
2	7/18/17	UPDATE TO 6TH ED. (2017) FBC	LFS
1	10/14/16	UPDATE TO 5TH ED. (2014) FBC	JK

DATE: 11/3/08
SCALE: N.T.S.
DWG. BY: AL
CHK. BY: LFS
DRAWING NO.: FL-12186.8
SHEET 5 OF 10

© 2008 R.W. Building Consultants Inc.

Z:\2023 FBC Drawings\Metal Mfg Industries\FL-12186 R4\12186.1-8.dwg

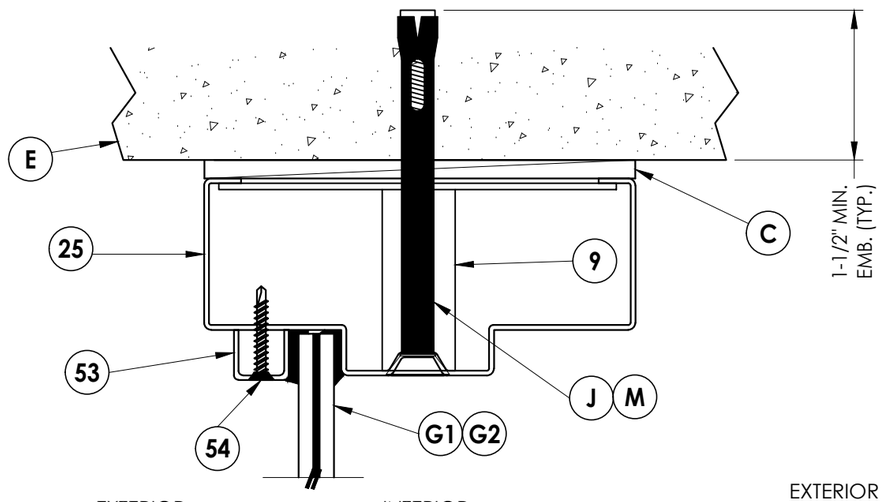

1/6 VERTICAL CROSS SECTION

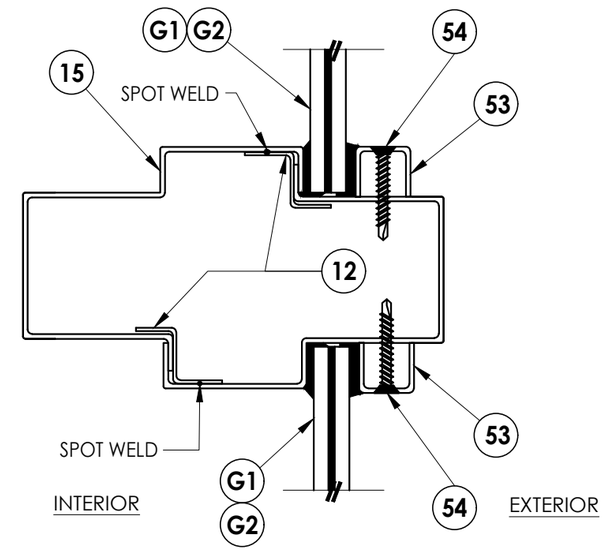

2/6 VERTICAL CROSS SECTION

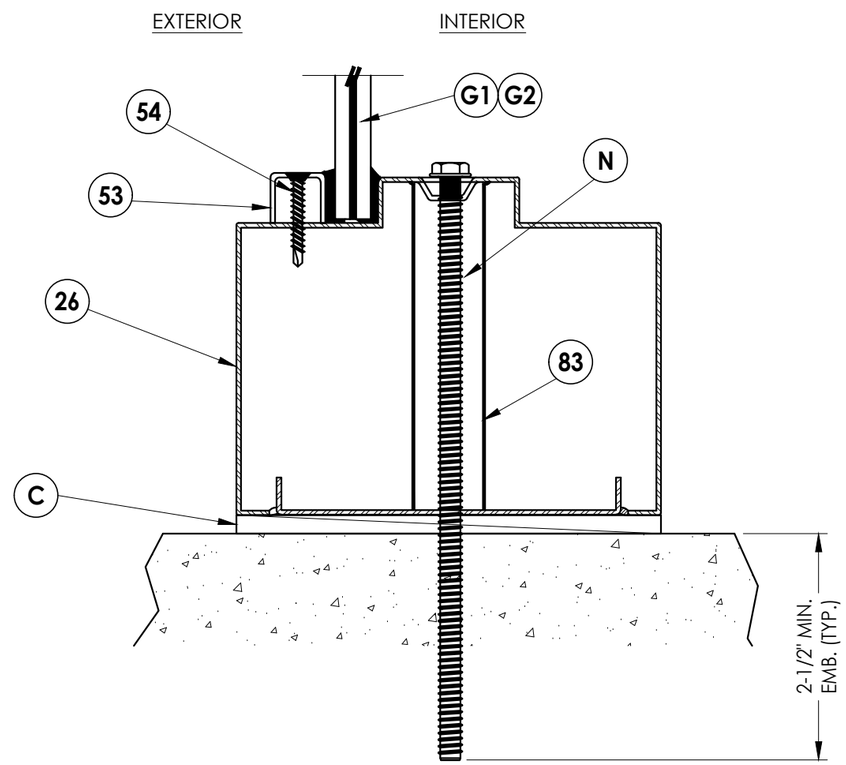

3/6 VERTICAL CROSS SECTION

Documents Prepared By:
Lyndon F. Schmidt
P.E. No. 43409
RW BUILDING CONSULTANTS, INC.
P.O. Box 230, Valrico, FL 33595
Phone No.: 813.659.9197
FBPE Registry No. 9813

PRODUCT: MMI "N" STEEL DOOR

PART OR ASSEMBLY: VERTICAL CROSS SECTIONS

NO.	DATE	REVISIONS	BY
4	7/11/23	UPDATE TO 8TH ED. (2023) FBC	LFS
3	7/30/20	UPDATE TO 7TH ED. (2020) FBC	DAC
2	7/18/17	UPDATE TO 6TH ED. (2017) FBC	LFS
1	10/14/16	UPDATE TO 5TH ED. (2014) FBC	JK

DATE: 11/3/08
SCALE: N.T.S.
DWG. BY: AL
CHK. BY: LFS
DRAWING NO.: FL-12186.8
SHEET 6 OF 10

© 2008 R.W. BUILDING CONSULTANTS INC.

Z:\2023 FBC Drawings\Metal Mfg Industries\FL-12186 R4\12186.1-8.dwg

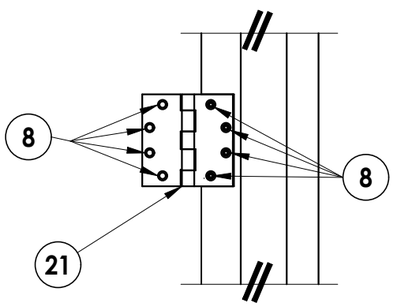

DETAIL 1

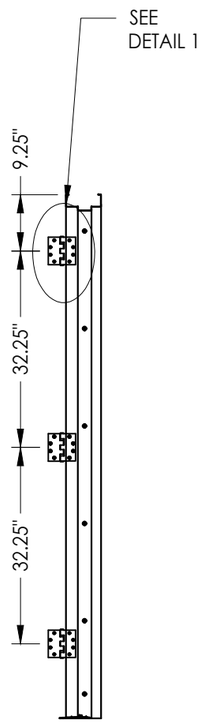

HINGE JAMB

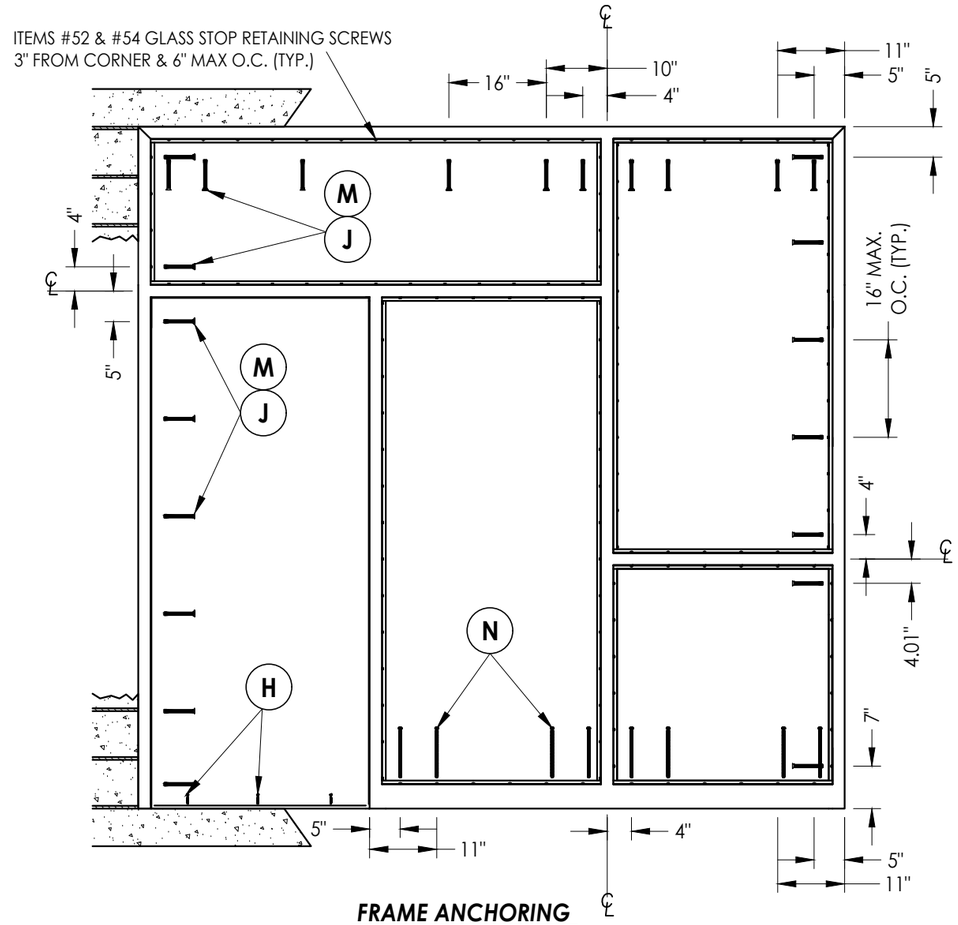

FRAME ANCHORING

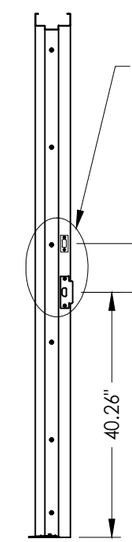

STRIKE JAMB

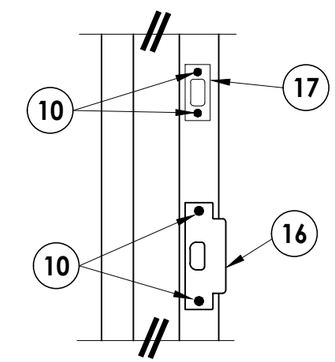

DETAIL 2

CONCRETE ANCHOR NOTES:

1. *Concrete anchor locations at the corners may be adjusted to maintain the min. edge distance to mortar joints.*
2. *Concrete anchor locations noted as "MAX. ON CENTER" must be adjusted to maintain the min. edge distance to mortar joints, additional concrete anchors may be required to ensure the "MAX. ON CENTER" dimension are not exceeded.*
3. *Concrete anchor table:*

ANCHOR TYPE	ANCHOR SIZE	MIN. EMBEDMENT	MIN. CLEARANCE TO MASONRY EDGE	MIN. CLEARANCE TO ADJACENT ANCHOR
ITW TAPCON®	1/4"	1-1/4"	2-1/2"	4"
DYNABOLT SLEEVE ANCHOR	3/8"	1-1/2"	2-1/4"	4-1/2"
TAPPER	3/8"	1-1/2"	4-1/4"	6"
SCREW-BOLT+™	1/2"	2-1/2"	6"	6"

4. *Embedment may be through 1-1/4" face shell of hollow block.*

Documents Prepared By:
Lyndon F. Schmidt
P.E. No. 43409

RW BUILDING CONSULTANTS, INC.
P.O. Box 230, Valrico, FL 33595
Phone No.: 813.659.9197
FBPE Registry No. 9813

PRODUCT: *MMI "N" STEEL DOOR*

PART OR ASSEMBLY: *ANCHORING DETAILS*

REVISIONS

NO.	DATE			
4	7/11/23	UPDATE TO 8TH ED. (2023)	FBC	LFS
3	7/30/20	UPDATE TO 7TH ED. (2020)	FBC	DAC
2	7/18/17	UPDATE TO 6TH ED. (2017)	FBC	LFS
1	10/14/16	UPDATE TO 5TH ED. (2014)	FBC	JK

DATE: 11/3/08
SCALE: N.T.S.
DWG. BY: AL
CHK. BY: LFS
DRAWING NO.: FL-12186.8
SHEET 7 OF 10

© 2008 R.W. BUILDING CONSULTANTS INC.

Z:\2023 FBC Drawings\Metal Mfg Industries\FL-12186 R4\12186.1-8.dwg

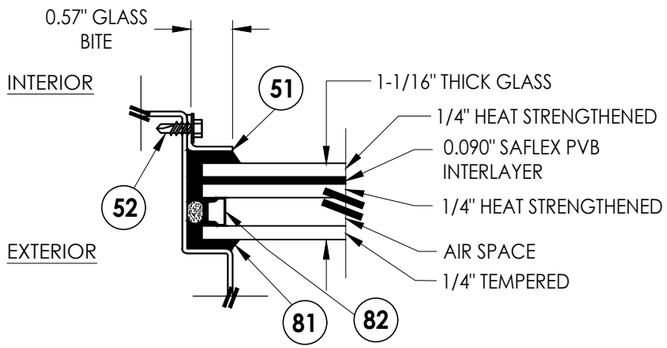

G1 GLAZING DETAIL

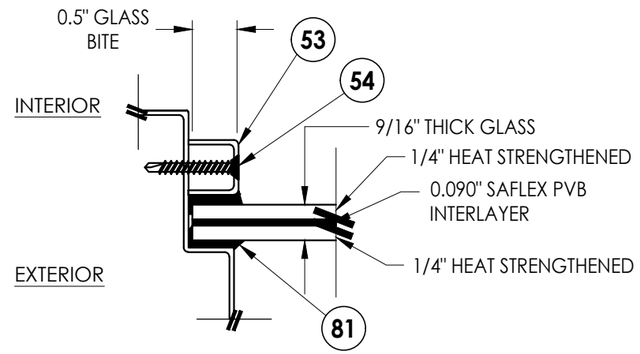

G2 GLAZING DETAIL
9/16" Monolithic glass
Produced by Old Castle

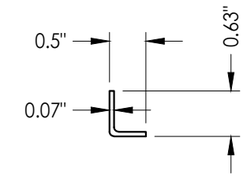

51 GLASS STOP

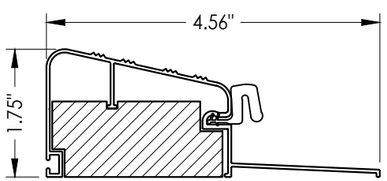

78 OUTSWING THRESHOLD

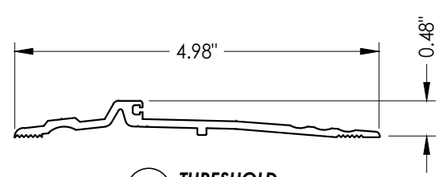

40 THRESHOLD

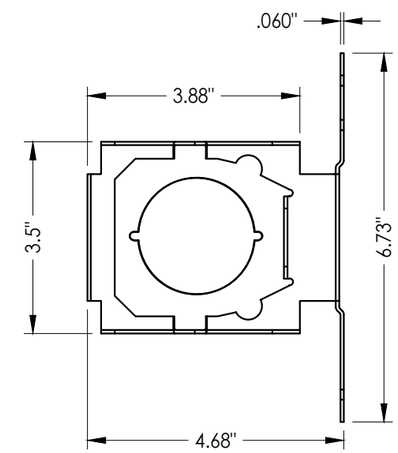

5 LOCK BOX REINFORCEMENT

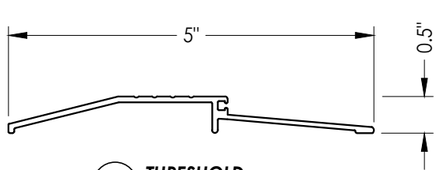

41 THRESHOLD

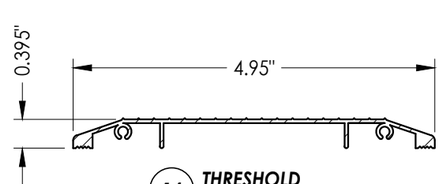

14 THRESHOLD

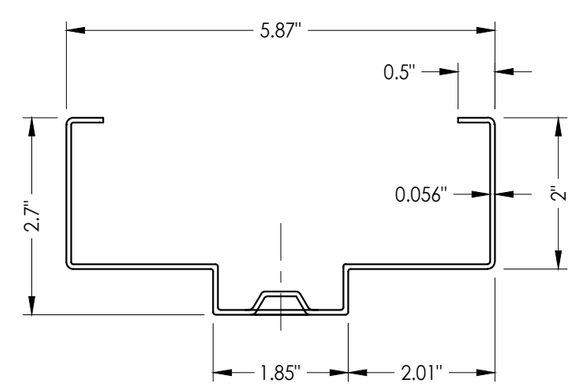

25 HOLLOW METAL FRAME

Documents Prepared By:
Lyndon F. Schmidt
P.E. No. 43409

RW BUILDING CONSULTANTS, INC.
P.O. Box 230, Valrico, FL 33595
Phone No.: 813.659.9197
FBPE Registry No. 9813

PRODUCT: "N" STEEL DOOR MMI

PART OR ASSEMBLY: GLAZING DETAILS & COMPONENTS

REVISIONS

NO.	DATE		BY
4	7/11/23	UPDATE TO 8TH ED. (2023) FBC	LFS
3	7/30/20	UPDATE TO 7th ED. (2020) FBC	DAC
2	7/18/17	UPDATE TO 6TH ED. (2017) FBC	LFS
1	10/14/16	UPDATE TO 5TH ED. (2014) FBC	JK

DATE: 11/3/08
SCALE: N.T.S.
DWG. BY: AL
CHK. BY: LFS
DRAWING NO.: FL-12186.8
SHEET 8 OF 10

© 2008 R.W. Building Consultants Inc.

Z:\2023 FBC Drawings\Metal Mfg Industries\FL-12186 R4\12186.1-8.dwg

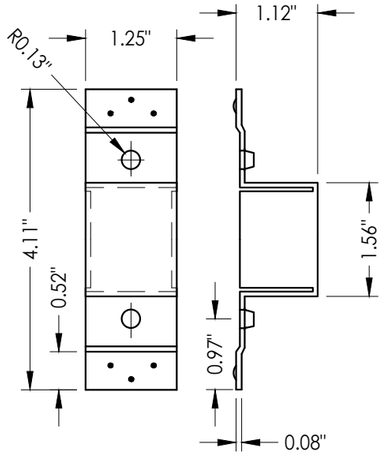

19 DEADBOLT STRIKE REINFORCEMENT

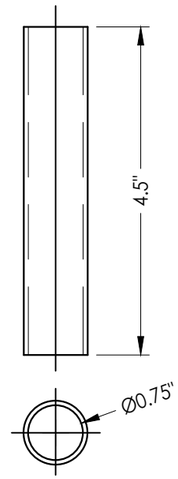

83 SILL TUBE ANCHOR

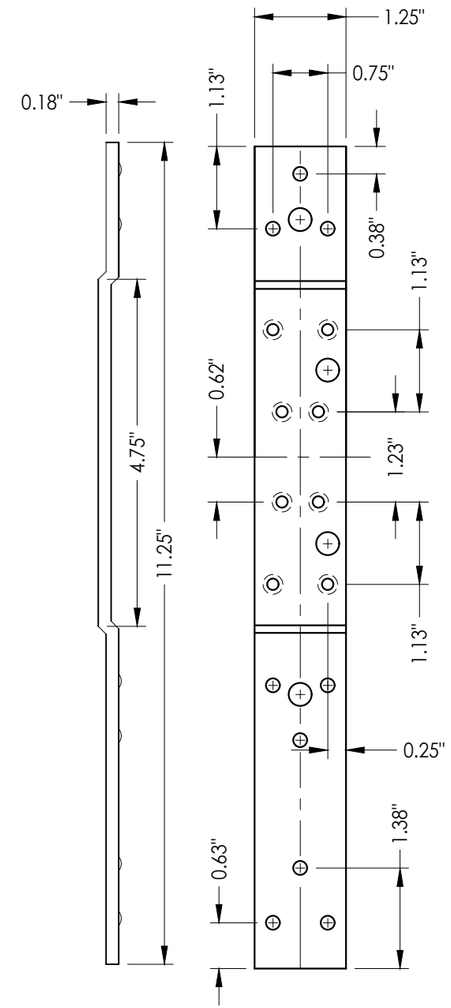

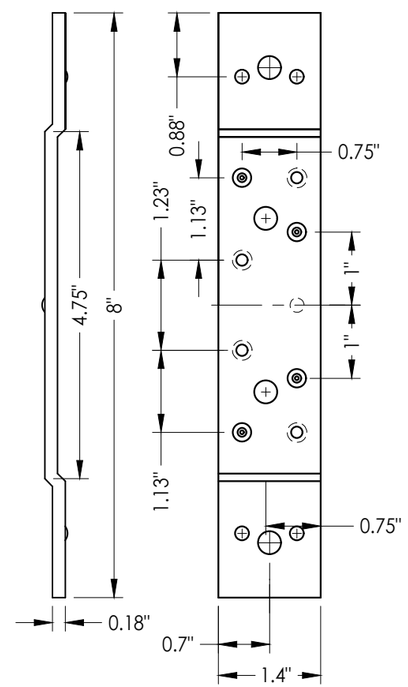

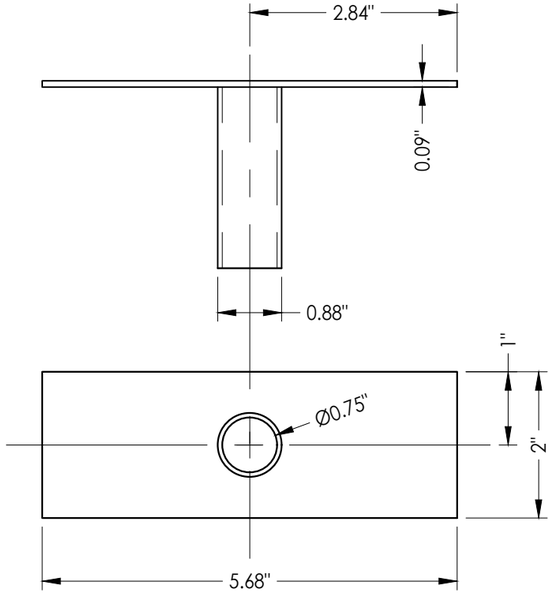

9 TUBE ANCHOR

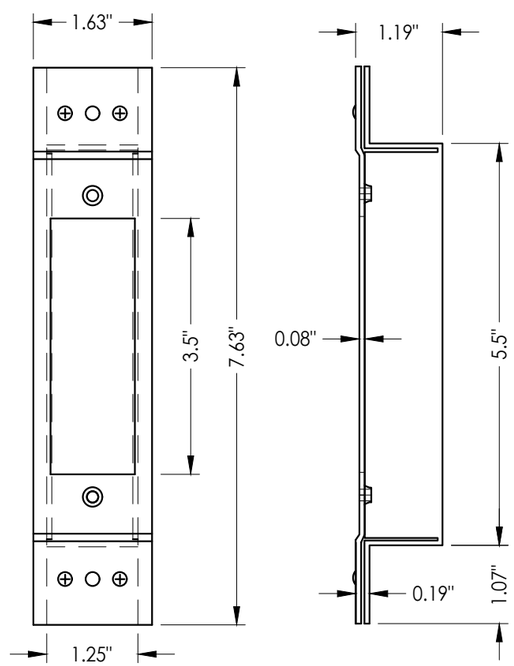

27 LATCH STRIKE REINFORCEMENT

23 STANDARD (SHORT) DOOR HINGE
Reinforcement middle and bottom hinge

22 STANDARD (LONG) DOOR HINGE
Reinforcement top hinge

Documents Prepared By:
Lyndon F. Schmidt
P.E. No. 43409

RW BUILDING CONSULTANTS, INC.
P.O. Box 230, Valrico, FL 33595
Phone No.: 813.659.9197
FBPE Registry No. 9813

PRODUCT: MMI "N" STEEL DOOR

PART OR ASSEMBLY: GLAZING DETAIL & COMPONENTS

NO.	DATE		BY
1	10/14/16	UPDATE TO 5TH ED. (2014) FBC	JK
2	7/18/17	UPDATE TO 6TH ED. (2017) FBC	LFS
3	7/30/20	UPDATE TO 7th ED. (2020) FBC	DAC
4	7/11/23	UPDATE TO 8TH ED. (2023) FBC	LFS

REVISIONS

DATE: 11/3/08
SCALE: N.T.S.
DWG. BY: AL
CHK. BY: LFS
DRAWING NO.: FL-12186.8
SHEET 9 OF 10

© 2008 R.W. Building Consultants Inc.

Z:\2023 FBC Drawings\Metal Mfg Industries\FL-12186 R4\12186.1-8.dwg

BILL OF MATERIALS

ITEM	DESCRIPTION	MATERIAL	ITEM	DESCRIPTION	MATERIAL
C	MAX. 1/4" SHIM SPACE	-	23	STANDARD (SHORT) DOOR HINGE MIDDLE BOTTOM REINFORCEMENT	STEEL
E	MASONRY - 3,000 PSI MIN. CONCRETE CONFORMING TO ACI 301 OR HOLLOW BLOCK CONFORMING TO ASTM C90	CONCRETE	24	WEATHER STRIP (THRESHOLD)	NEOPRENE
			25	FRAME 5-3/4" X 2" MIN. (0.056" THK) BY MMI	STEEL
H	1/4" x 1-3/4" ITW PFH CONCRETE SCREW	STEEL	26	FRAME SILL 5-3/4" X 4" MIN. (0.056" THK) BY MMI	STEEL
J	3/8" X 5" PFH ITW DYNABOLT SLEEVE ANCHOR	STEEL	27	LATCH STRIKE REINFORCEMENT	STEEL
M	3/8" X 5" TAPPER CONCRETE SCREW BY POWERS FASTENERS	STEEL	28	FRAME HINGE REINFORCEMENT	STEEL
N	1/2" X 8" HH SCREW-BOLT+ CONC. ANCHOR (DeWALT/POWERS)	STEEL	29	COLUMBIA DOOR BOTTOM SWEEP #2580	ALUMINUM
1	"N" OPAQUE STEEL DOOR PANEL	-	40	THRESHOLD NATIONAL GUARD PRODUCTS, INC. #896	ALUMINUM
2	DOOR SKIN (0.042" THK. STEEL, Fy = 40,300 PSI MIN.)	STEEL	41	THRESHOLD NATIONAL GUARD PRODUCTS, INC. #950	ALUMINUM
3	FOAM 1.0 PCF MIN. DENSITY	POLYSTYRENE	45	95WHA DOOR SWEEP NATIONAL GUARD PRODUCTS, INC.	ALUMINUM
4	DOOR TOP & BOTTOM CLOSER	STEEL	46	#6 X 3/4" PHILIPS HEAD SMS	STEEL
5	LOCK BOX REINFORCEMENT	STEEL	51	L-CHANNEL GLASS STOP	STEEL
6	CLOSER REINFORCEMENT	STEEL	52	#8 X .5" HH SELF DRILLING SCREW	STEEL
8	#12-24 x 1/2" SELF TAPPER	STEEL	53	U-CHANNEL GLASS STOP	STEEL
9	TUBE ANCHOR	STEEL	54	#8 X 1.25" PFH SMS	STEEL
10	#12-24 x 1.0" COMBINATION MACHINE / WOOD SCREW	STEEL	70	SCHLAGE LOCK SET ASSEMBLY ND53PD	STEEL
12	MULLION Z BRACKET	STEEL	71	DESIGN HARDWARE D1-S SERIES DEADBOLT	STEEL
14	COLUMBIA ADA THRESHOLD #6510	ALUMINUM	72	DESIGN HARDWARE "Z" SERIES ENTRY	STEEL
15	MULLION MIN. (0.056" THK) BY MMI	STEEL	76	DESIGN HARDWARE D2-S SERIES DEADBOLT	STEEL
16	ANSI LATCH STRIKE	STEEL	77	DESIGN HARDWARE "X" SERIES ENTRY	STEEL
17	DEADBOLT STRIKE	STEEL	78	OUTSWING THRESHOLD QOSH BY DLP	ALUM/WOOD
19	DEADBOLT STRIKE REINFORCEMENT	STEEL	79	WEATHER-STRIP	FOAM
20	WEATHER-STRIP	NEOPRENE	81	DOW 995 STRUCTURAL SILICONE	SILICONE
21	4-1/2" X 4-1/2" X 0.125" TEMPLATE HINGE	STEEL	82	GLASS SPACER	ALUMINUM
22	STANDARD (LONG) DOOR HINGE TOP HINGE REINFORCEMENT	STEEL	83	SILL TUBE ANCHOR	STEEL
			84	MULLION REINFORCEMENT	STEEL

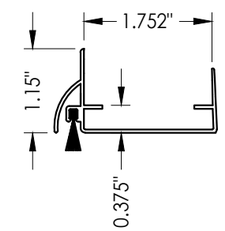

45 DOOR SWEEP

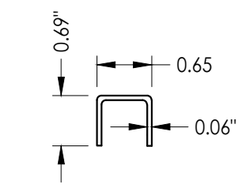

53 GLASS STOP

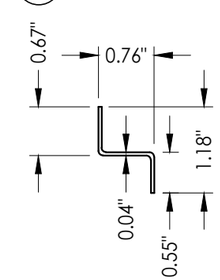

12 MULLION Z BRACKET

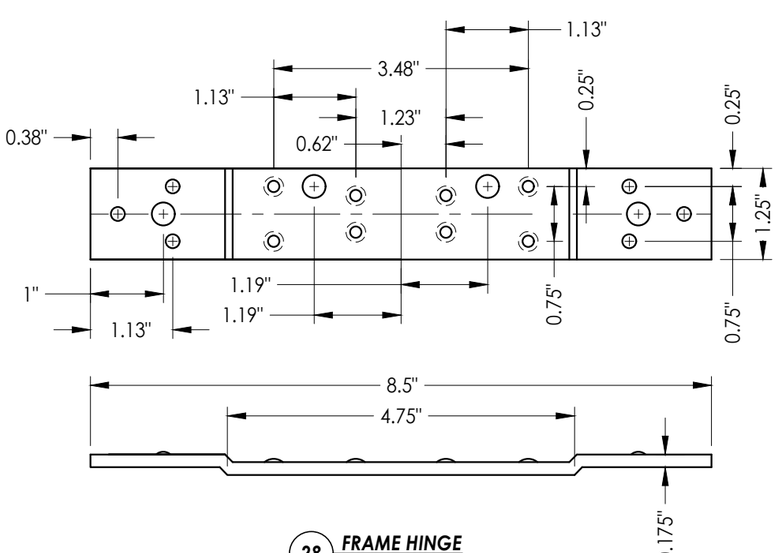

28 FRAME HINGE Reinforcement

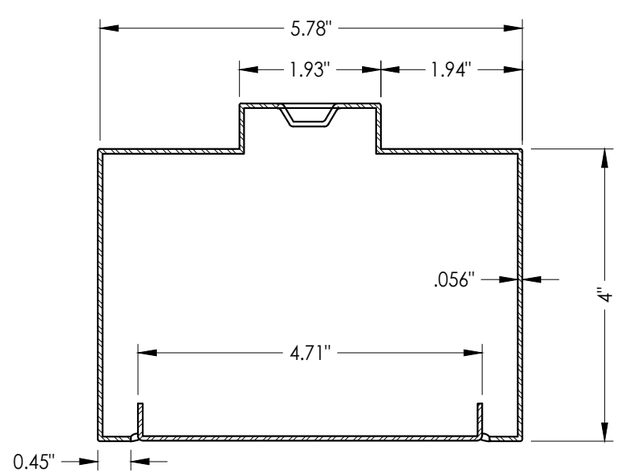

26 HOLLOW METAL FRAME SILL

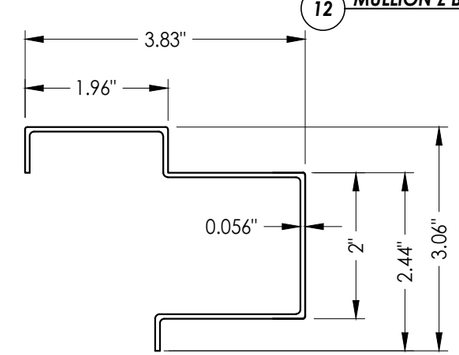

15 MULLION

Documents Prepared By:
Lyndon F. Schmidt
P.E. No. 43409

RW BUILDING CONSULTANTS, INC.
P.O. Box 230, Valrico, FL 33595
Phone No.: 813.659.9197
FBPE Registry No. 9813

PRODUCT: "N" STEEL DOOR, MMI

PART OR ASSEMBLY: BILL OF MATERIALS & COMPONENTS

NO.	DATE	REVISIONS	BY
4	7/11/23	UPDATE TO 8TH ED. (2023) FBC	LFS
3	7/30/20	UPDATE TO 7th ED. (2020) FBC	DAC
2	7/18/17	UPDATE TO 6TH ED. (2017) FBC	LFS
1	10/14/16	UPDATE TO 5TH ED. (2014) FBC	JK

DATE: 11/3/08
SCALE: N.T.S.
DWG. BY: AL
CHK. BY: LFS
DRAWING NO.: FL-12186.8
SHEET 10 OF 10

© 2008 R.W. Building Consultants Inc.

Z:\2023 FBC Drawings\Metal Mfg Industries\FL-12186 R4\12186.1-8.dwg